KIJVANICH
กิจวานิช 2535

AUTHORIZED
KYB DISTRIBUTOR

GENUINE KYB HYDRAULICS

PISTON PUMPS · TRAVEL MOTORS · SWING MOTORS
BLOCK KIT · PLATE VALVE · PUMP GEAR · SEAL KITS



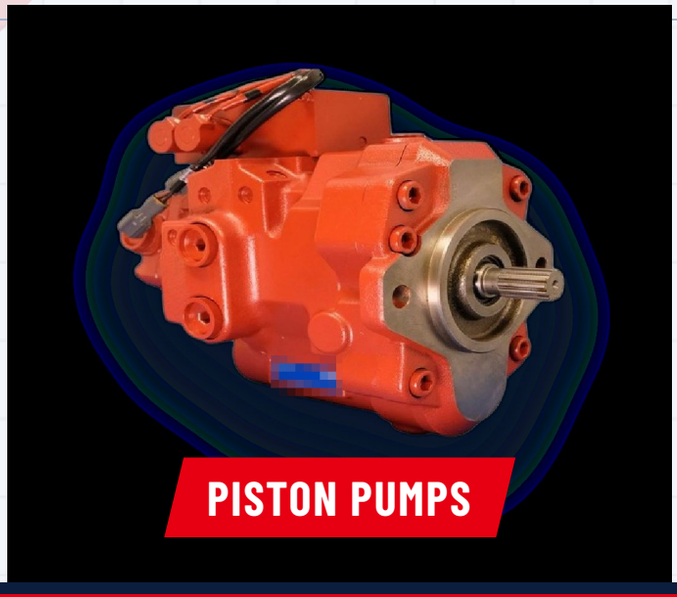

PISTON PUMPS

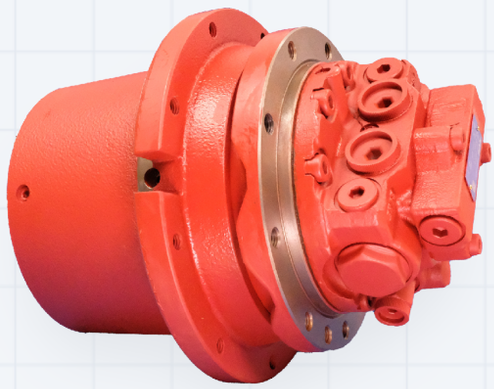

TRAVEL MOTORS

EST. 1992
KYB AUTHORIZED DEALER

30+
COUNTRIES SERVED

100%
GENUINE KYB PARTS

01 — COMPANY PROFILE

34 YEARS OF GENUINE JAPANESE HYDRAULICS

Kijvanich 2535 has been an authorized KYB (Kayaba) distributor since 1992. Founded by Chaiporn Vanichchokij, we began by supplying Thai machinery manufacturers and have grown into an international supplier to parts dealers, distributors and repair shops in more than 30 countries.

1992	30+	100%
KYB AUTHORIZED SINCE	COUNTRIES SERVED	GENUINE PARTS

INSIDE A MINI EXCAVATOR

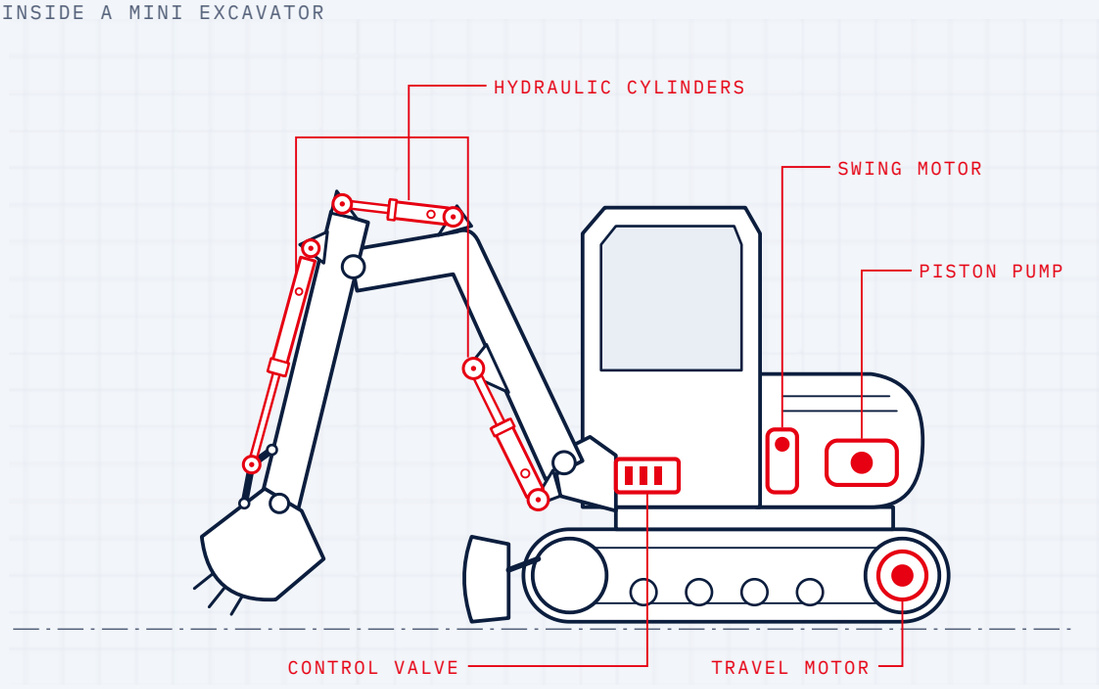

OUR PROMISE

Genuine OEM parts from Japan, honest technical advice, deep stock and fast, reliable delivery.

02 — WHAT WE SUPPLY

01 Piston pumps (PSVL / PSVD)

02 Travel motors (MAG motors)

03 Swing motors (MSG motors)

04 Gear pumps

05 Forklift pumps

06 Hydraulic cylinder seal kits

EXCAVATOR BRANDS SERVED

KUBOTA | YANMAR | BOBCAT | HITACHI | KOBELCO | SUMITOMO | CAT

FORKLIFT PUMP BRANDS

TOYOTA | KOMATSU | HYSTER | TCM | NISSAN | MITSUBISHI

KIJVANICH
กิจวานิช 2535

KX91-3SX-P

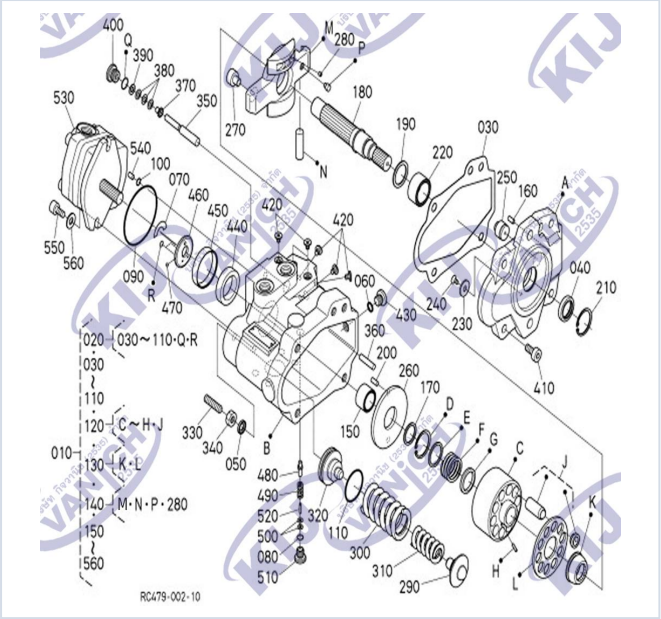



ITEM	DESCRIPTION
10	PUMP ASS'Y (PISTON)
120	BLOCK KIT, CYLINDER
130	RETAINER ASS'Y
260	PLATE VALVE
140	PLATE KIT, SWASH
280	BUSH, SWASH PLATE
220	BEARING NEEDLE (FRONT)
150	BEARING NEEDLE (REAR)
460	PLATE, TROCHOID, ROTOR ASS'Y
440	TROCHOID, ROTOR ASS'Y
450	BUSH, TROCHOID
530	PUMP GEAR
20	KIT SEAL (PUMP CASE + FLANGE)
40	SEAL OIL (PUMP SHAFT)
30	GASKET

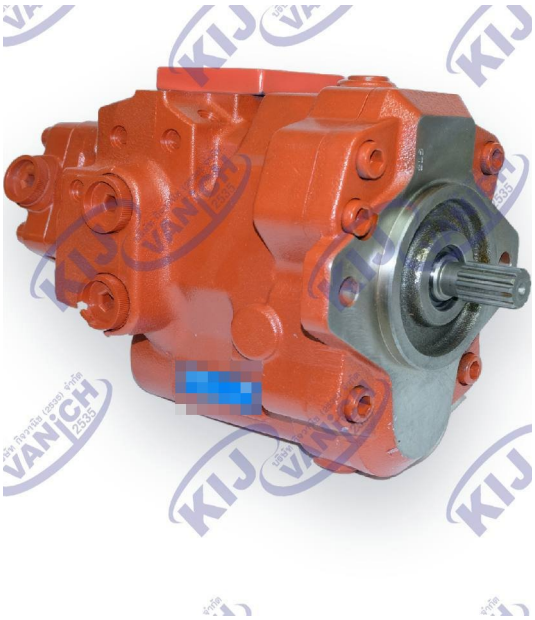

TEL +66 81 813 7740 | +66 2 878 0105
EMAIL sales@kijvanich2535.com
WHATSAPP +66 81 813 7740
WEB www.kijvanich2535.com
WECHAT
Scan 扫码 →

KIJVANICH
กิจวานิช 2535

V1035

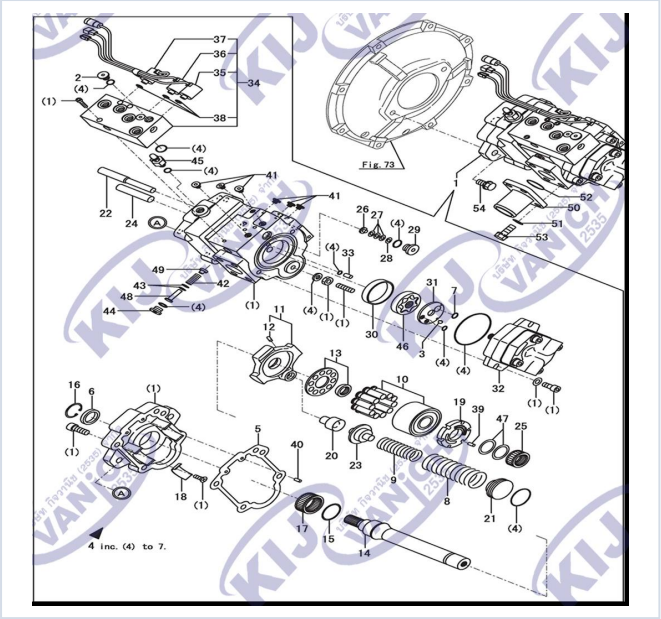



ITEM	DESCRIPTION
1	PUMP ASS'Y (PISTON)
10	BLOCK KIT, CYLINDER
13	RETAINER ASS'Y
19	PLATE VALVE
11	PLATE KIT, SWASH
18	BUSH, SWASH PLATE
17	BEARING NEEDLE (FRONT)
25	BEARING NEEDLE (REAR)
30	BUSH, TROCHOID
31	PLATE, TROCHOID
46	TROCHOID, ROTOR ASS'Y
32	PUMP GEAR
34	VALVE ASS'Y SOLENOID
4	KIT SEAL (PUMP CASE + FLANGE)
6	SEAL OIL (PUMP SHAFT)
5	GASKET



TEL +66 81 813 7740 | +66 2 878 0105
WHATSAPP +66 81 813 7740
WECHAT
EMAIL sales@kijvanich2535.com
WEB www.kijvanich2535.com
Scan 扫码 →

KIJVANICH
กิจวานิช 2535

V1055

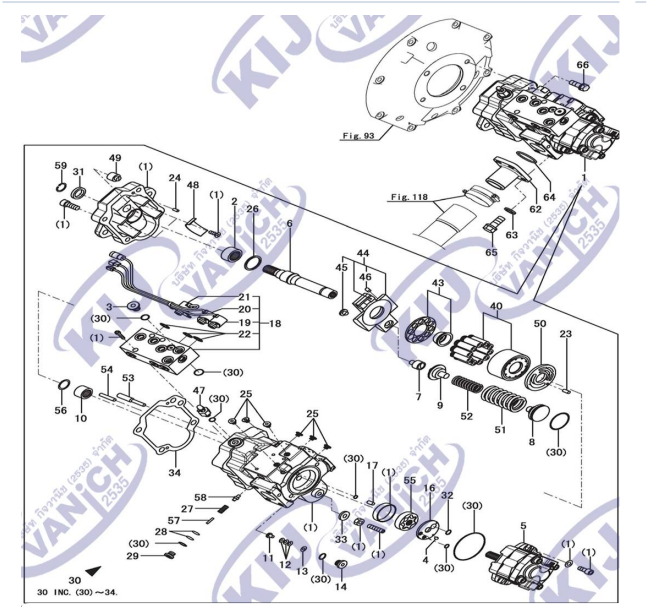



ITEM	DESCRIPTION
1	PUMP ASS'Y (PISTON) 3 S/V
40	BLOCK KIT, CYLINDER
43	RETAINER ASS'Y
50	PLATE VALVE
44	PLATE KIT, SWASH
48	BUSH, SWASH PLATE
2	BEARING NEEDLE (FRONT)
10	BEARING NEEDLE (REAR)
16	PLATE, TROCHOID
55	TROCHOID, ROTOR ASS'Y
5	PUMP GEAR
18	VALVE ASS'Y SOLENOID - 3 S/V
30	KIT SEAL (PUMP CASE + FLANGE)
31	SEAL OIL (PUMP SHAFT)
34	GASKET



TEL +66 81 813 7740 | +66 2 878 0105
WHATSAPP +66 81 813 7740
WECHAT
EMAIL sales@kijvanich2535.com
WEB www.kijvanich2535.com
Scan 扫码 →

KIJVANICH
กิจวานิช 2535

KX033

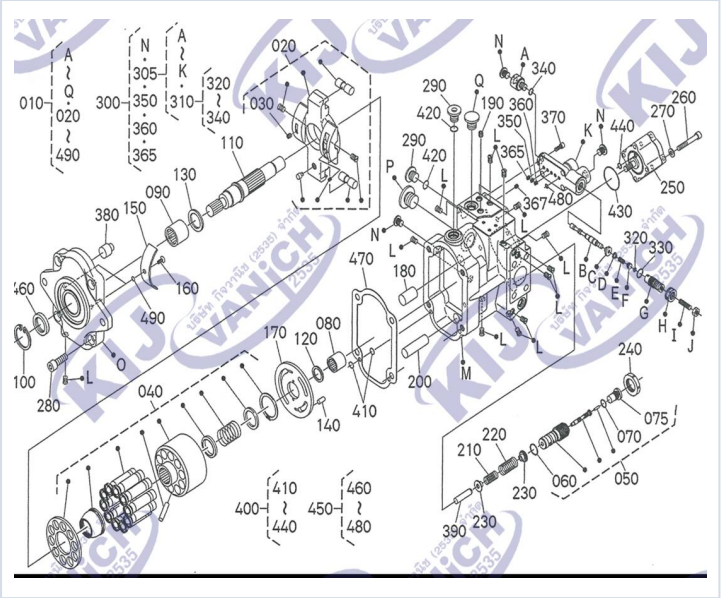



NO.	DESCRIPTION
10	PUMP ASS'Y (PISTON)
40	BLOCK ASS'Y, CYLINDER
170	PLATE VALVE
20	KIT, PLATE SWASH
150	BUSH, PLATE SWASH
80	BEARING, NEEDLE (REAR)
90	BEARING NEEDLE (FRONT)
50	VALVE ASS'Y, SWASH PLATE ADJUST
300	VALVE L.S, ASS'Y
250	PUMP, GEAR
460	SEAL, OIL (PUMP SHAFT)
470	GASKET (PUMP FLANGE)
400	SEAL KIT (CASE)
450	SEAL KIT (FLANGE)
310	SEAL KIT, VALVE L.S

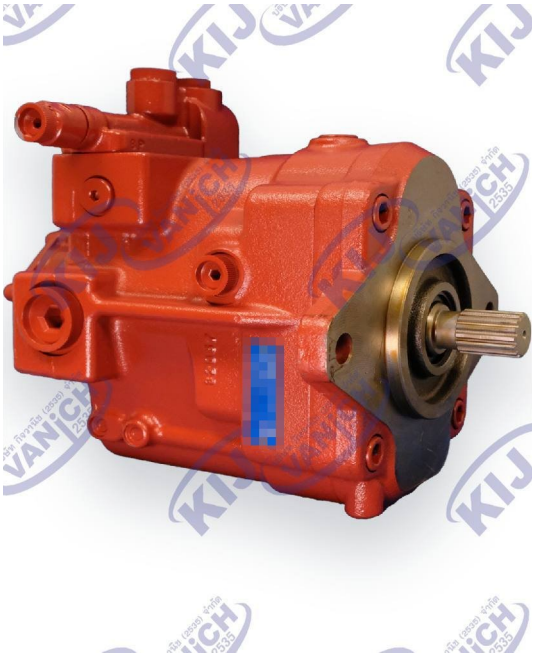

TEL +66 81 813 7740 | +66 2 878 0105
EMAIL sales@kijvanich2535.com
WHATSAPP +66 81 813 7740
WEB www.kijvanich2535.com
WECHAT
Scan 扫码 →

KIJVANICH
กิจวานิช 2535

KX161-3

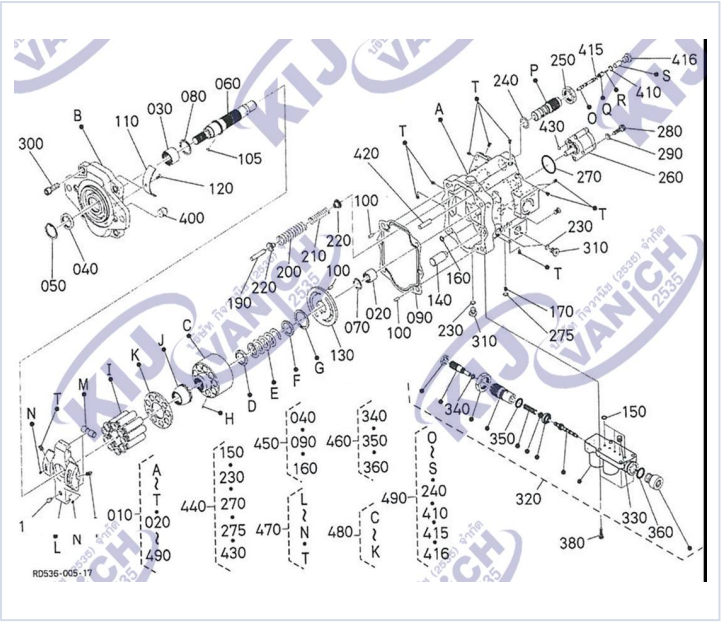



ITEM	DESCRIPTION
10	PUMP ASS'Y (PISTON)
480	BLOCK KIT, CYLINDER
470	KIT PLATE SWASH
110	BUSH, PLATE SWASH
130	PLATE VALVE
320	VALVE L.S, ASS'Y
490	VALVE ASS'Y, SWASH PLATE ADJUST
260	PUMP GEAR
60	SHAFT
20	BEARING NEEDLE (REAR)
30	BEARING NEEDLE (FRONT)
40	SEAL, OIL (PUMP SHAFT)
440	KIT SEAL (CASE)
450	KIT SEAL (FLANGE)
460	KIT SEAL, VALVE L.S
90	GASKET

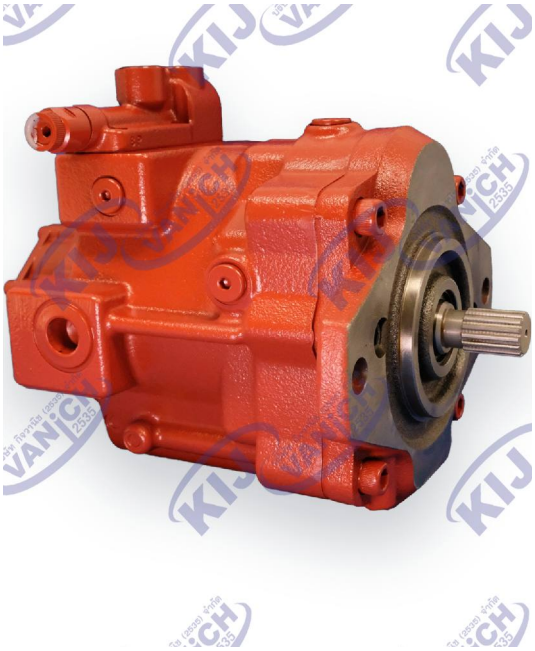

TEL +66 81 813 7740 | +66 2 878 0105
EMAIL sales@kijvanich2535.com
WHATSAPP +66 81 813 7740
WEB www.kijvanich2535.com
WECHAT
Scan 扫码 →

KIJVANICH
กิจวานิช 2535

U55-6

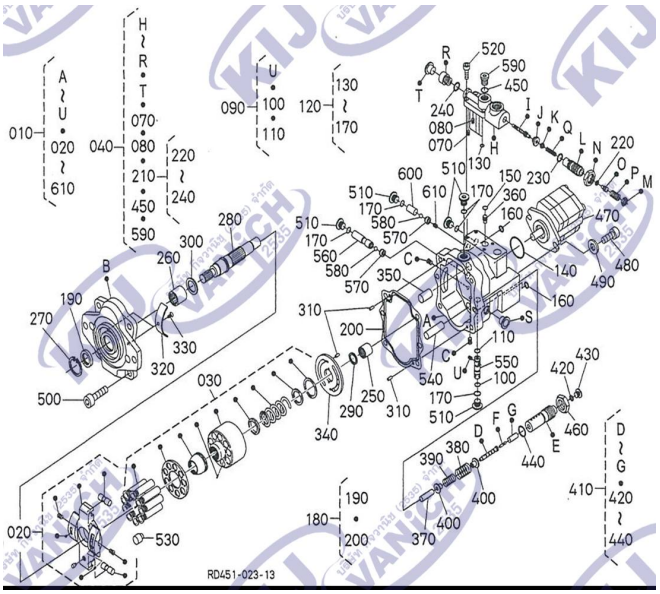

ITEM	DESCRIPTION
10	PUMP ASS'Y (PISTON)
30	BLOCK KIT, CYLINDER
20	PLATE KIT, SWASH
340	PLATE VALVE
40	VALVE ASS'Y L.S.
410	VALVE ASS'Y, SWASH PLATE
470	PUMP GEAR
320	BUSH (SWASH PLATE)
250	BEARING NEEDLE (REAR)
260	BEARING NEEDLE (FRONT)
190	SEAL, OIL
120	KIT SEAL (CASE)
180	KIT SEAL (FLANGE)
200	GASKET (FLANGE)
90	ORIFICE ASS'Y



TEL +66 81 813 7740 | +66 2 878 0105
EMAIL sales@kijvanich2535.com
WHATSAPP +66 81 813 7740
WEB www.kijvanich2535.com
WECHAT
Scan 扫码 →

KIJVANICH
กิจวานิช 2535

KX080-3



NO.	DESCRIPTION
10	PUMP ASS'Y (PISTON)
40	BLOCK KIT, CYLINDER
20	PLATE KIT, SWASH
20(P2)	VALVE ASS'Y L.S W/ORIFICE
80(P2)	VALVE ASS'Y
110	BEARING NEEDLE (REAR)
120	BEARING ROLLER (FRONT)
60	SEAL OIL
50	SEAL KIT, CASE
90	GASKET
180(P3)	PUMP GEAR

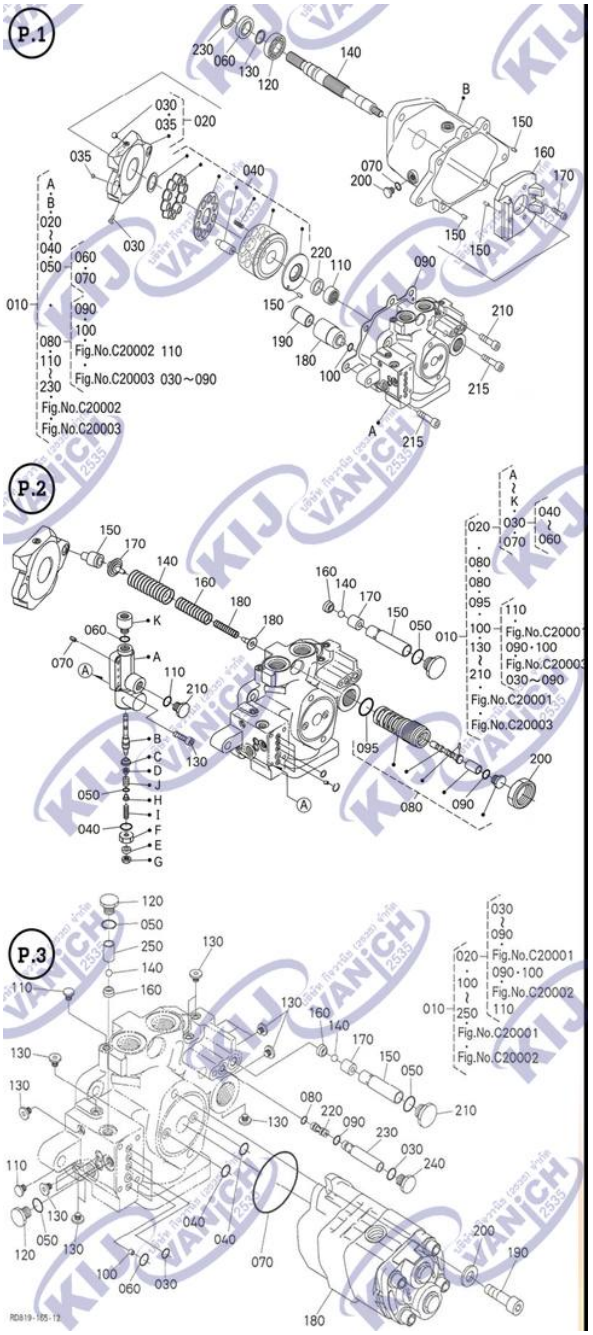

TEL +66 81 813 7740 | +66 2 878 0105
EMAIL sales@kijvanich2535.com
WHATSAPP +66 81 813 7740
WEB www.kijvanich2535.com
WECHAT
Scan 扫码 →

KIJVANICH
กิจวานิช 2535

KX165-5

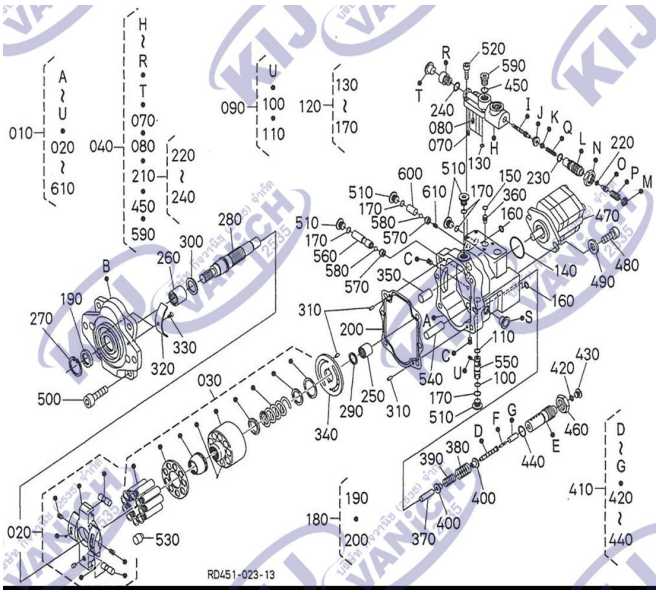

ITEM	DESCRIPTION
10	PUMP ASS'Y (PISTON)
30	BLOCK KIT, CYLINDER
20	PLATE KIT, SWASH
340	PLATE VALVE
40	VALVE ASS'Y L.S.
410	VALVE ASS'Y, SWASH PLATE
470	PUMP GEAR
320	BUSH (SWASH PLATE)
250	BEARING NEEDLE (REAR)
260	BEARING NEEDLE (FRONT)
190	SEAL, OIL
120	KIT SEAL (CASE)
180	KIT SEAL (FLANGE)
200	GASKET (FLANGE)
90	ORIFICE ASS'Y

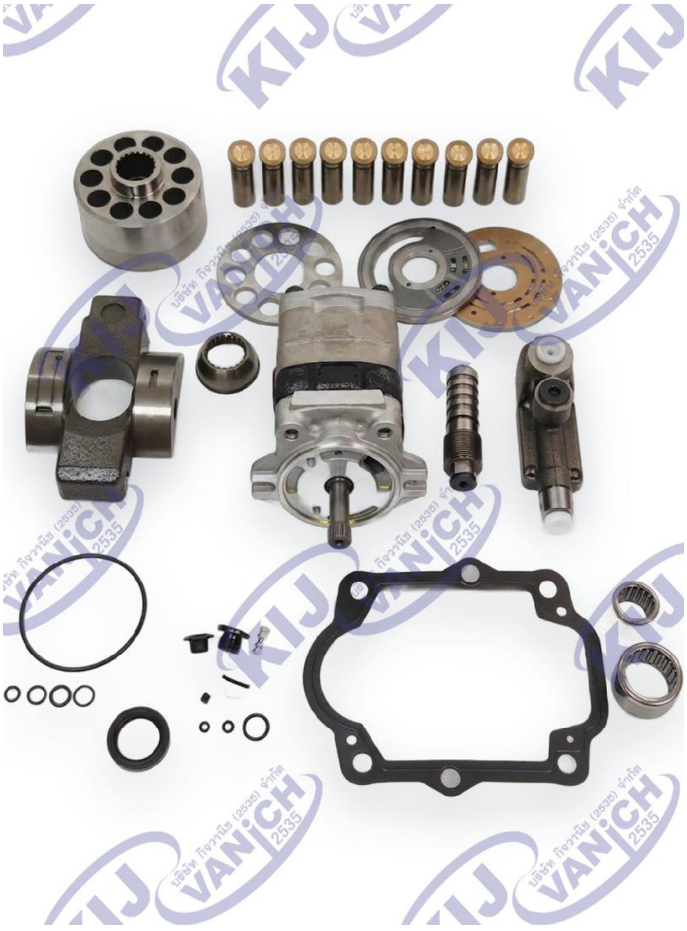

TEL +66 81 813 7740 | +66 2 878 0105
EMAIL sales@kijvanich2535.com
WHATSAPP +66 81 813 7740
WEB www.kijvanich2535.com
WECHAT
Scan 扫码 →

KIJVANICH
กิจวานิช 2535

U40-5

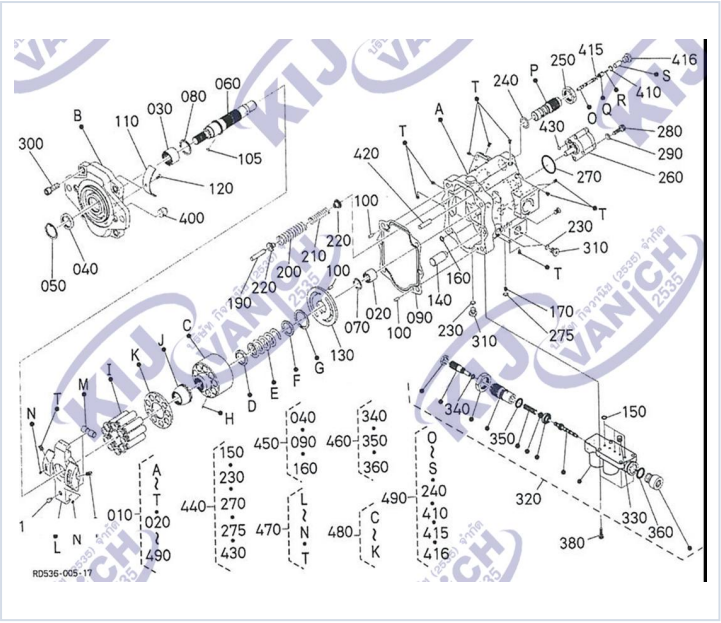



ITEM	DESCRIPTION
10	PUMP ASS'Y (PISTON)
480	BLOCK KIT, CYLINDER
470	KIT PLATE SWASH
110	BUSH, PLATE SWASH
130	PLATE VALVE
320	VALVE L.S, ASS'Y
490	VALVE ASS'Y, SWASH PLATE ADJUST
260	PUMP GEAR
60	SHAFT
20	BEARING NEEDLE (REAR)
30	BEARING NEEDLE (FRONT)
40	SEAL, OIL (PUMP SHAFT)
440	KIT SEAL (CASE)
450	KIT SEAL (FLANGE)
460	KIT SEAL, VALVE L.S
90	GASKET

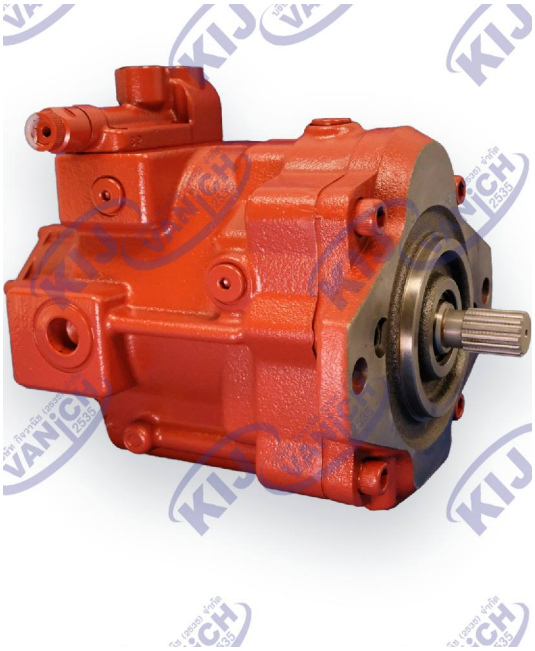

TEL +66 81 813 7740 | +66 2 878 0105
EMAIL sales@kijvanich2535.com
WHATSAPP +66 81 813 7740
WEB www.kijvanich2535.com
WECHAT
Scan 扫码 →

กิจวานิช 2535

TEL	+66 81 813 7740 | +66 2 878 0105
WHATSAPP	+66 81 813 7740
EMAIL	sales@kijvanich2535.com
WECHAT	Scan the QR 微信扫码 →
WEB	www.kijvanich2535.com
ADDRESS	50/15K Soi Chom Thong 13, Chom Thong Rd., Chom Thong, Bangkok 10150, Thailand

WECHAT

SCAN · CONNECT · ORDER

LET'S KEEP YOUR MACHINES RUNNING.

Scan to reach our team, explore the full range of our product and request a quote.